FIGHTER

FUSO

Fighter 1227.

4x2 / 6-SP MANUAL / AIR SUSP.

CLASS LEADING 30,000KM SERVICE INTERVALS.

GVM	GCM	Power/Torque
12,000KG	20,000KG	199KW / 784NM

- Medium rigid licence required.

FUSO

JOB DONE

DAIMLER

FUSO.COM.AU

SPECIFICATIONS

	MODEL	WHEEL BASE	GVM (optional)	GCM (optional)
A	4x2 1227 Air Susp. LWB 6 Sp. MAN (FK65FLZ2RFAC)	5210mm	12,000kg	20,000kg
B	4x2 1227 Air Susp. XLWB 6 Sp. MAN (FK65FMZ2RFAC)	5540mm	12,000kg	20,000kg

Engine

Engine Version	FUSO 6M60-9AT2 Diesel
Configuration	6 Cyl. In-line OHC, 4-Valve
Type	Variable Geometry Turbo Charged Air to Air Intercooler
Displacement	7.5 litre (7545cc)
Bore	118mm
Stroke	115mm
Power (ECE R85-00)	199kW @ 2500 rpm
Torque (ECE R85-00)	784Nm @ 1100-2400 rpm
Maximum Engine Speed	2900 rpm
Compression Ratio	16.0:1
Cooling System / Oil Cooler	Water cooled, 23.0L capacity/ Plate type engine oil cooler
Air Cleaner	Paper Element Type with Restrictor Indicator. Vertical Intake Mounted on Clean Air Side (RH)
Emission Control	Selective Catalytic Reduction (SCR) after-treatment system (BlueTec), Positive Crankcase Ventilation (PCV)
Emission Level	ADR 80/03 - Euro 5

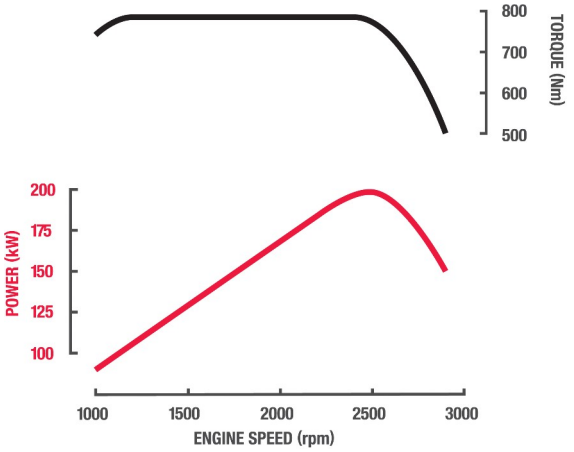

Fuel

Injection System	DENSO Common Rail System Electronically Controlled Direct Injection
Tank Type	Rectangular Steel Tank with Locking Cap
Fuel Capacity *	200 Litres
AdBlue Exhaust Fluid Capacity	22 Litres
Notes	*Max Fill to approx 95% of Air Capacity

Cooling

Fan Drive	Thermo modulated continuous control (Viscous)
Radiator	Corrugated Fin with Expansion Tank

Electrical

Voltage	24V Negative Earth
Alternator Capacity	24V-80 amp
Starter Capacity	24V-5.0kW
Battery Capacity	2x12V, 100Ah/20hr
Headlamp Type	Halogen
Headlamp Capacity	Low Beam 2x70W High Beam 2x75W

Clutch

Clutch Model	FUSO C7M38
Type	Single Dry Plate
Operation/Specification	Air Assisted Hydraulic

Transmission

Version	FUSO Manual M070S6-OD
Type/Speeds	6 with Air Assisted Gearshift
Features	Synchromesh 2nd-6th
Ratios	1st: 6.807 2nd: 4.172 3rd: 2.396 4th: 1.504 5th: 1.000 6th: 0.774 Rev. 6.807
PTO Opening	LH Side

Propeller Shaft

Type	P10
Universal Joint	Needle Roller

Front Axle

Axle Version	FUSO F500T
Type	Reverse Elliot 'I' Beam
Capacity *	5000kg
Notes	*See MAX LOADING for vehicle capacity.

Front Suspension

Type	Parabolic Leaf with Double Acting Shock Absorbers
Size	1300x70mm Leaves

Rear Axle

Type	Full Floating Hypoid
Axle Version	FUSO R052T/D052H
Capacity*	9500kg
Ratio	4.625:1
Notes	*See MAX LOADING for vehicle capacity.

Rear Suspension

Type	Air Suspension
Details	Trailing Arm with Air Dump Control and Double Acting Shock Absorbers
Air Spring	2x270mm dia.
Trailing Arm	(683+424)x80x35mm-2 Leaves

Max Loading

Front	4500kg
Rear	9200kg
Total	12000kg

Options

Steering

Type	Integral Power Assisted Ball and Nut
Steering Column	Tilt/Telescopic Adjustable with Lock
Ratio	18.0~19.8:1

Brakes

Type	Full Air, Dual Circuit, FUSO Taper Roller, Automatic Brake adjustment, ABS with ASR (Anti Slip Regulator)
Size Front	370x150mm
Size Rear	370x150mm
Park Brake	Rear Wheel Spring Actuated
Auxiliary	Exhaust Brake
Compressor	Water Cooled, 340cc Single Cyl.
Air Dryer Model	DU5

SPECIFICATIONS

	MODEL	WHEEL BASE	GVM (optional)	GCM (optional)
A	4x2 1227 Air Susp. LWB 6 Sp. MAN (FK65FLZ2RFAC)	5210mm	12,000kg	20,000kg
B	4x2 1227 Air Susp. XLWB 6 Sp. MAN (FK65FMZ2RFAC)	5540mm	12,000kg	20,000kg

Wheels & Tyres

Wheel Type	7, Single Piece Disc
Wheel Size	19.5x6.75DC-147-13t
Wheel Stud Pattern	8x275mm PCD
Tyre Size All	265/70R19.5 140/138M
Spare Tyre Carrier	Provided

Chassis

Type	Parallel Channel with Reinforcement
Size	230x80x8.0mm
Width	844mm
Tensile Strength	540Mpa

Instruments

Gauges	Speedometer with Odometer Tachometer Air Pressure (2) Fuel Level Water Temperature
Colour Information Display	Fuel Consumption Service Indicators Hour Meter and Tripmeter
Warning Lamps	ABS Turn Signal High Beam Exhaust Brake Oil Level Ad Blue Low Fuel Low Park Brake Alternator Oil Filter Blockage Engine Control / Cruise Control ECU) Air Filter Restriction Fuel Filter Water Contamination Door Opening
Warning Lamp/Buzzer	Air Pressure Oil Pressure Engine Overheat / Low Coolant Level

Multi-Media Package

Satellite Navigation	Maps with heavy vehicle weight, length, height & hazardous material selectable restrictions with 3 years of Map updates
Colour Display	6.2 inch LCD with touch screen control
Phone Connectivity	Bluetooth® hands free
Audio Visual Entertainment	Bluetooth® music streaming compatible Digital radio DAB+ (also AM/FM for areas not covered by DAB+) USB & 3.5mm/AUX port
Reversing Camera Compatible	Display can accept up to 5 cameras#
Optional Accessories (available at additional cost)	Rear Mounted Parking Sensor Kit (High or Low) USB Quick Charge Kit Qi Wireless Charging Pocket for Mobile Devices Tyre Pressure Monitoring System
Notes	# Cameras available through spare parts

Standard Features

Airbag(s)	Driver's Air Bag and Seat Belt Pre-tensioners
Hill Start System	Yes
Cab Cooling & Heating	Air Conditioner / Heater / Demister
Accessory Power	24V Accessory Power Outlet / Cigar Lighter
Driving	ASR (Traction Control) Keyless Central Locking Electric Windows Cruise Control LH Transom Window Fuso Multimedia Unit Cup Holders (4) Rear Quarter Glass Fluorescent Cabin Lamp and Interior Reading Lamps Engine Idle Speed Control
Storage	Centre Seat Storage Console Rear Bunk Storage Pocket Dash Storage Tray 2 DIN Glove Compartment 1 Single & 1 Double DIN Slot for Accessories Overhead Storage Pocket with Lid RH Door Storage Pocket
Cab: External	Roof Mounting Points (max. static load 70kg) Front End-Outline Marker Lamps
Chassis	Chassis Mounted Tool Box Reverse Warning Buzzer Integrated Front Underrun Protection System (FUPS)

Cab Features

Type	All Steel Forward Control Manual Tilt 44 deg.
Mounting	Hydroelastic Susp. 4 Point
Colour	Natural White
Interior	Fully Trimmed
Windscreen	Laminated Tinted
Windscreen Wipers	2 Speed + Intermittent Cycle with Integrated Washer Nozzles
Door	90 degree Opening Angle
Rear Vision Mirrors	Remote / Heated with Convex Spotter (Both Sides)
Seating Capacity	3
Seat Belts	2 ELR Lap Sash, 1 Lap Driver pre-tensioner
Seat (driver)	ISRI Air Suspension with Height, Tilt and Dampening Adjustment Integral Headrest and Fabric Trim
Seats (passenger)	Centre: Low Back with Fabric Trim Forward Folding Far Passenger: Fixed Base with Reclining Seat Back, Integral Headrest and Fabric Trim

Service Intervals

Interval*	30,000km or 12 Months (whichever occurs first)
Notes	* based on normal operating conditions and may be reduced when operating under severe conditions.

Warranty

Basic/Powertrain	5 Years or 300,000kms (whichever occurs first)
Cab Perforation/Anti Corrosion	5 Years

Performance

Turning Circle (kerb to kerb - metres)	A 18.2	B 19.4
Road Speed (km/h) at Max Engine Speed	128	
Engine Speed (rpm) at 100km/hr (top gear)	2249	
Gradeability at Rated GVM (theoretical)*	46%	
Gradeability at Rated GCM (theoretical)*	25%	
Notes	*This is theoretical performance only. Actual performance may vary under different conditions	

SPECIFICATIONS

	MODEL	WHEEL BASE	GVM (optional)	GCM (optional)
A	4x2 1227 Air Susp. LWB 6 Sp. MAN (FK65FLZ2RFAC)	5210mm	12,000kg	20,000kg
B	4x2 1227 Air Susp. XLWB 6 Sp. MAN (FK65FMZ2RFAC)	5540mm	12,000kg	20,000kg

Mass estimated*

Front*	A 2485kg	B 2515kg
Rear*	A 1530kg	B 1515kg
Total*	A 4015kg	B 4030kg
Notes	* Mass (est.) includes oil and water but excludes spare wheel, tools & fuel. Weights provided are subject to 3.5% variation (+/-)	

Dimensions mm

WFF (Width Front Fender) (mm)	2170	
WRA (Width Rear Axle) (mm)	2270	
WFT (Width Front Track) (mm)	1780	
WRT (Width Rear Track) (mm)	1710	
Width Frame (mm)	844	
A - Length Overall (mm)	A 8645	B 9075
C - Front Overhang (mm)	1135	
D - Wheelbase (mm)	A 5210	B 5540
G - Front Axle to Rear of Cab (mm)	855	
H - Rear of Cab to Rearmost Item Behind Cab (mm)	130	
I - Rearmost Item Behind Cab to Rear Axle (mm)	A 4225	B 4555
J - Frame, Rear Axle to End (mm)	A 2300	B 2400
P - Height Cab to Ground (mm)	A 2524	B 2525
Q - Height Cab to Frame (mm)	1669	
R - Height Rear Frame to Ground (mm)	Inflated: 858 Deflated: 802	

Body Builder's Notes

Notes	Chassis reinforcement must be utilised for Tipper/Demountable type body configurations. To conform with ADR 13/00 and 14/02 (lighting/mirror requirements) the following must be adhered to at body installation. - If other than a flat type or tipper body is fitted, rear end out-line marker lamps must be installed. - If overall length exceeds 6.0 metres, side reflectors must be installed. - If overall length exceeds 7.5 metres, side marker lamps must be installed. - If overall width is less than 2.4 metres, the mirrors must be modified to project not more than 230mm. To conform with ADR 42/04 (General Safety), rear wheel guards must be fitted to the vehicle.

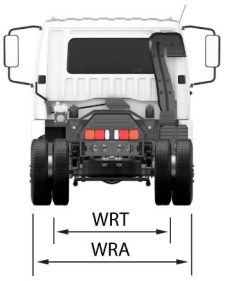

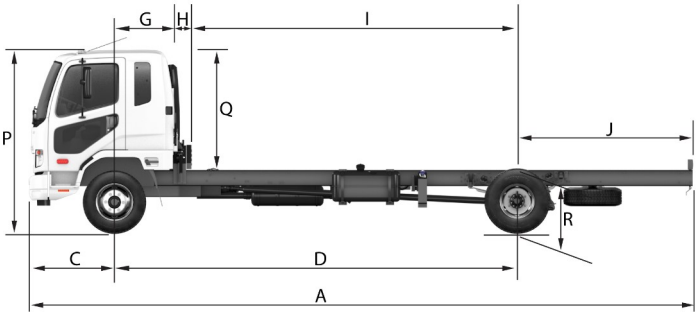

FUSO

Call 1800 033 557

or visit fuso.com.au

Unless specified in writing herein the accessories, applications, bodies or equipment depicted in this document are for illustration purposes only and may not be available from Daimler Truck and Bus Australia Pacific Pty Ltd. ABN 86 618 413 282 DTB. No representation or warranty whatsoever is given in relation to any accessories, applications, bodies or equipment or suitability of same that are shown herein that may be manufactured, supplied or fitted by a party other than DTB. DTB reserves the right without notice or obligation to discontinue or make changes to the colour, designs, materials and specifications of the products and options referred to herein at any time. For the most current information and in order to ascertain which accessories, applications, bodies and equipment are available from DTB please contact your authorised FUSO Truck and Bus dealer. Fuso is a registered trademark of Daimler Truck and Bus Australia Pacific Pty Ltd. Copyright DTB. Reproduction in whole or part prohibited without written approval. Part Number TSF36F-SSV4. Valid from 01-Oct-19.